ISSN 2395-1621

Re-Design of Impeller of Centrifugal Pump of a Wankel Engine and Its Performance Analysis Using CFD

#1Manjunath,#2 Nagendra Babu, #3Dr. D Radhakrihna,#4 Prof. S.D. Mahajan

1manjunath.jew@gmail.com,
2anbiitkgp@gmail.coM
4sdmorama@gmail.com

#14PES Modern College of Engineering Pune, India

#23VRDE Ahmednagar, India

ABSTRACT

The centrifugal pump is used for coolant pumping in Wankel engine. There is a need of higher rate of cooling to avoid higher temperature levels in the engine housings. It is proposed to achieve about 20 to 25% higher flow rate by redesigning the centrifugal pump while maintaining the same differential head, but there are geometrical and operational constraints like impeller outer diameter, discharge diameter, speed, volute shape and size etc. can not be changed due to constraints from engine core components. The pump impeller has been redesigned with the aid of CFD by varying parameters like eye diameter, inlet and exit angle, number of blades and their thickness etc. Numerically, varying each parameter one at a time or combination of parameters, numerically impeller design is improved to achieve more flow rate. After multiple design modifications, improved final design is fabricated and tested. Experimentally, about 12% improvement in flow rate is achieved while no substantial change in head is observed. Impeller inlet diameter and exit blade angle found to have major influence on improvement of flow rate.

Keywords— **Centrifugal pump, CFD, Experiment, Flow rate, Impeller, Wankel engine**

ARTICLE INFO

Article History

Received :18th November 2015

Received in revised form :

19th November 2015

Accepted : 21st November , 2015

Published online :

22nd November 2015

I. INTRODUCTION

Centrifugal pumps are used in various applications and are integral part of processes in many industries. Yet, in spite of their prevalence and relatively simple configurations compared to other turbo machines, designing an efficient and durable pump remains a challenge. The design of centrifugal pumps performance is determined empirically because it relies on the use of a number of experimental and statistical rules. However, during the last few years, the design and performance analysis of turbo machinery have experienced great progress due to the joint evolution of computer power and the accuracy of numerical methods. The centrifugal cooling water pump is used in cooling of the Wankel engine. The Wankel engine is a type of internal combustion engine, it works on Otto cycle principle, using an eccentric rotary design to convert pressure into rotating motion. Wankel engine produces rotary speed of about 7000 rpm, it has both air and water cooling systems. Current study deals with only water cooling system.

There is a need of faster rate of cooling of a cooling jacket of the Wankel engine. About 20 to 25% of higher flow rates are required to be achieved by redesigning the impeller.

Design of centrifugal pump impeller involves a large number of dependent variables, however the impeller outlet diameter, the blade angle and the blade numbers are the most critical parameters which has the major effect on the performance of centrifugal pumps.

A new design of impeller is to be proposed with considering operational and geometrical constraints.

II. GEOMETRY

Centrifugal pump is an integral part of engine housing cooling system and it is a closed system. Unlike commercial pumps, it can not be removed or separated from housing as pump volute and discharge paths are carved in the housing itself. Pump has two discharge channels; both separately flows into housing and finally both meet at a common junction where flow is regulated by thermostat, depending on the temperature set. Thermostat is set to temperature T_t^0; if $T_f < T_t^0$ then fluid flow back into pump inlet through bypass conduit, otherwise flows to delivery pipe which is connected to radiator and radiator exit is connected to pump inlet. Cooling system runs as a closed system.Total capacity of flow rate developed by pump is summation of flow rate measured at delivery pipe and bypass conduit.

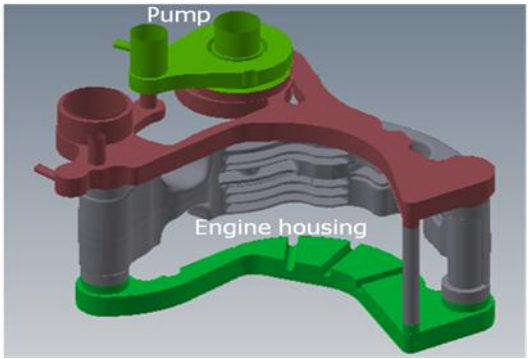

Fig. 1 3D CAD model of centrifugal pump and engine housing assembly system.

III. IMPELLER

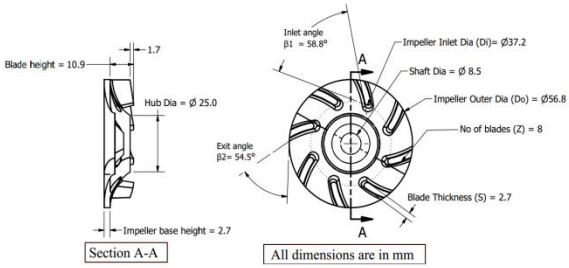

Fig. 2 Existing impeller details

Existing backward curved impeller details and graphical representation is presented in Table1 and Figure2 respectively.

Sr no.	Particulars	Details
1	Shaft diameter	8.5 mm
2	Hub diameter	25.0 mm
3	Impeller inlet diameter (D i)	37.2 mm
4	Impeller outer diameter (D o)	56.8 mm
5	No. of blades (Z)	8
6	Blade thickness (S)	2.7 mm
7	Impeller body base height	2.7 mm
8	Inlet angle (β1)	58.80
9	Outlet angle (β2)	54.80

Table 1 Dimensional details of existing impeller.

IV. DESIGN METHODOLOGY

CFD analysis to be done for existing design and compared with experimental testing results. Difference in CFD and experimental values to be taken into account and set as benchmarking design. Subsequent design of new impeller to be carried to achieve about 20-25% higher flow rate than benchmarking case. Improved design to be fabricated and tested. Process continues until required flow rate is met.

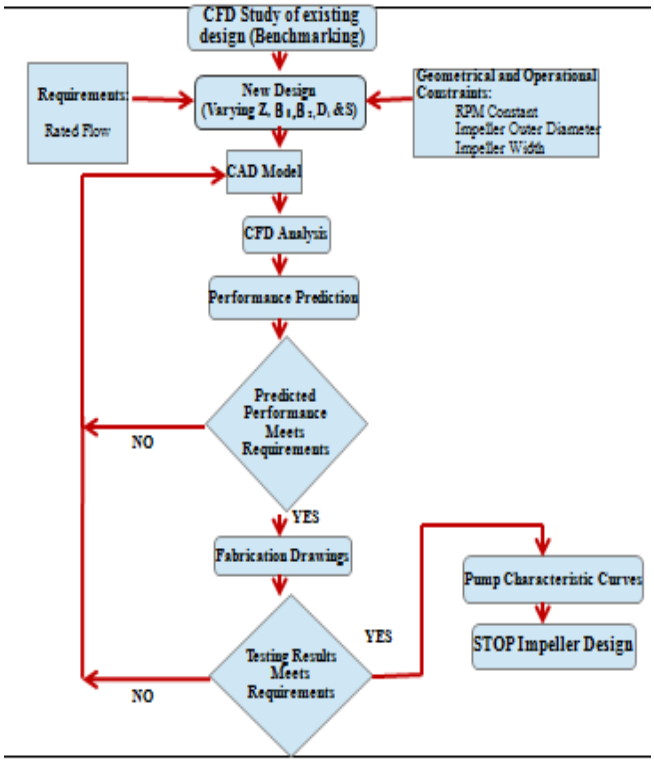

Fig. 3 Flow chart of methodology to be followed

V. LITERATURE SURVEY

Various researchers have done sensitivity and dependency of performance of a pump on various parameters like impeller outer diameter, eye diameter, exit and inlet angle, thickness of blades, number of blades or vanes etc. *M.H. Shojaeefard [1]* did numerical study on performance of impellers with the same outlet diameter having different blade numbers for centrifugal with maintaining constant impeller outlet diameter. *Wen-Guang Li [2]* study shows that flow rate dependency of flow rate on exit blade angle. Also explains the extent of hydraulic losses

at different range of flow rates. E.C. *Bacharoudis [3]* did parametric study on exit blade angle. *Khin Cho Thin [4]* carried out theoretical design and performance analysis of centrifugal pump. It is based on Berman method.

Nowadays, the design demands a detailed understanding of the internal flow during design and off-design operating conditions. Computational fluid dynamics (CFD) have successfully contributed to the prediction of the flow through pumps and the enhancement of their design. Computational Fluid Dynamics (CFD) is a numerical approach to solving the equations that govern the science of fluid dynamics. These equations are typically Partial Differential Equations (PDEs). Computational methods seek to complement theoretical and experimental methods in solving/understanding a given fluid flow phenomena. Theoretical methods solved for problems that are not too complicated in nature. When the problem is no longer simple, experiments are performed. However the advent of high speed computing and well established algorithms facilitated another method to analyze the behaviour of fluids as they interact with surfaces.

There are three methods to solve turbo machinery flows *[5]*. The Multiple reference frame method (MFR), the Mixing plane method and the Sliding mesh method. In all three methods, the flow in the rotor is calculated in a rotating reference frame, while the flow in the stator is calculated in an absolute reference frame. MFR or Frozen rotor method is a steady state simulation method. The basic idea of the model is to simplify the flow inside the pump into an instantaneous flow at one position, to solve unsteady-state problem with steady-state method *[6]*. Among all turbulence models, k-epsilon model *[7]* is widely used for incompressible internal flows and also for solving turbo machinery physics.

VI. GOVERNING EQUATIONS AND SOLVER

CFDExpert-Lite™ solver is used. It is an incompressible solver widely used in industries, DRDO and DRDL labs.

Since problem involves rotating physics, the governing equations are set in rotating reference frame and coriolis and centrifugal forces are added

as source terms. The mass conservation and momentum equations for a rotating reference frame

are as follows.

Mass Conservation:

$$\nabla.(\rho v_r) = 0$$

Conservation of angular momentum:

$$\nabla.(\rho v_r v) + \nabla.(\omega \times v) = -\nabla P + \nabla\tau$$

Where,

V_r = Relative velocity

V = Absolute velocity

ω = Relative velocity

The fluid velocities can be transformed from the stationary frame to the rotating frame using the following relation:

$$V_r = V - U_r$$

$$U_r = \omega_r * r$$

Where,

U_r = whirl velocity (the velocity viewed due to the moving frame)

r = position vector from the origin of the rotating frame.

VII. CFD ANALYSIS OF EXISITING DESIGN

As centrifugal pump is an integral part of engine housing system, so pump analysis is done with cooling system.

A. Geometry, Mesh and Boundary Conditions

CAD model of centrifugal pump housing, impeller and engine housing is shown in the figure. To avoid backflow and adverse physical gradients upstream and downstream are extended to a length of 10D, where D is corresponding diameter.

To separate rotating and stationary fluid zones, interface is created at mid-distance between volute and impeller tip. Bypass conduit is not modelled.

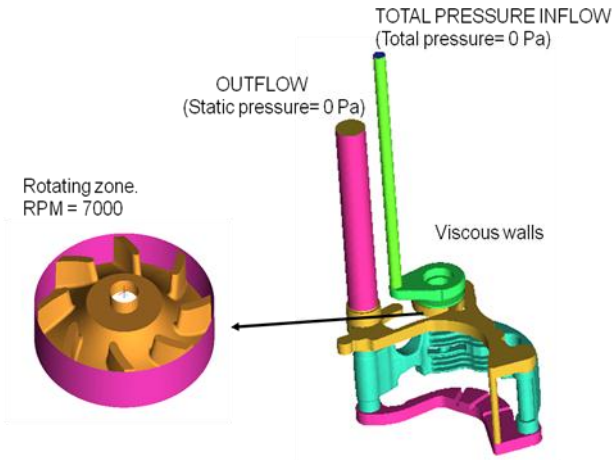

Fig. 4 CFD ready CAD of centrifugal pump and engine housing. Boundary conditions also shown.

Delaunay method is used in generating unstructured mesh. Total about 0.15million surface triangles and 1.8million tetrahedron in fluid domain are generated. Surface triangles on geometry and tetrahedron distribution in fluid domain can be seen in figure 5 and 6 respectively.

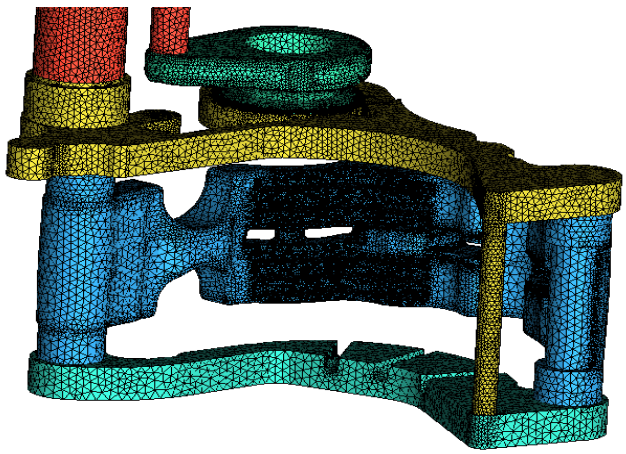

Fig. 5 Surface triangulation over geometry

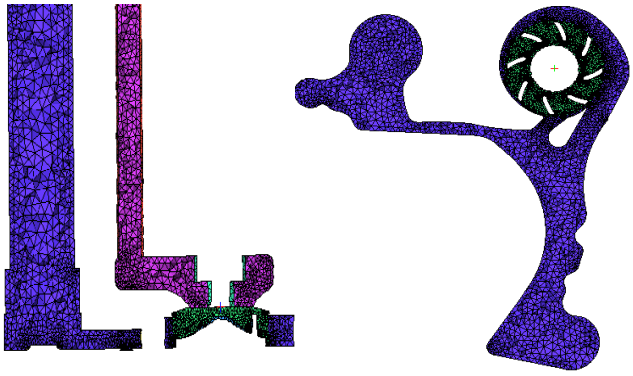

Fig. 6 Tetrahedron distribution at suction and delivery side (L), at impeller mid plane (R)

B. *Solving Setup*

Boundary conditions and solving techniques are tabulated in the table 2.

Parameter	Value/Type
Solver	Unstructured Incompressible
Numerical Convective Scheme	Upwind Difference Scheme
Flow Model	Incompressible
Turbulence Model	K-epsilon
Wall function	Standard
Turbulent intensity	10%
Eddy viscosity ratio	10
Boundary Conditions	Total pressure- Inflow, Pressure Outflow, Wall Viscous Boundary, Rotating Wall Viscous Boundary.
Fluid Density	1000 Kg/m3
Total gauge pressure at inlet	0 Pa
Static gauge pressure at outlet	0 Pa
Angular velocity	733.08 rad/s (Clock-rotation)

Table. II Solver and Boundary conditions details

C. *Grid Independence Study*

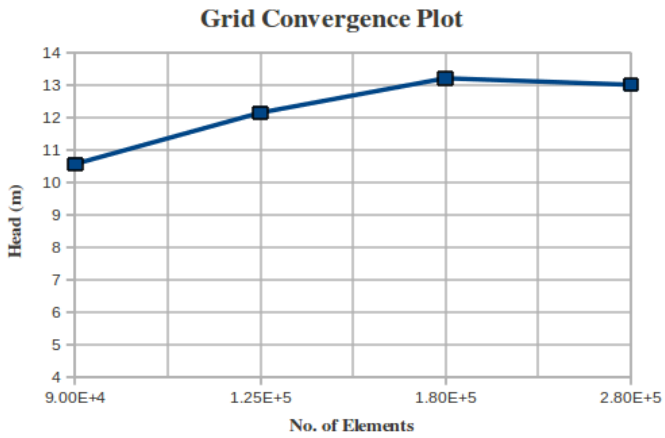

Fig. 7 Grid convergence plot.

Grid independence study is carried out to ensure results are not sensitive to number of volume elements. Head generated by pump is monitored. No change is observed in head by increasing number of elements beyond 0.18million. About 2% difference in head is observed which is acceptable considering numerical accuracy.

D. *Convergence History*

Convergence history of mass residue is shown in the Figure 7. Two decade residue fall is observed. It took about 2,500 iterations to get steady converged solution.

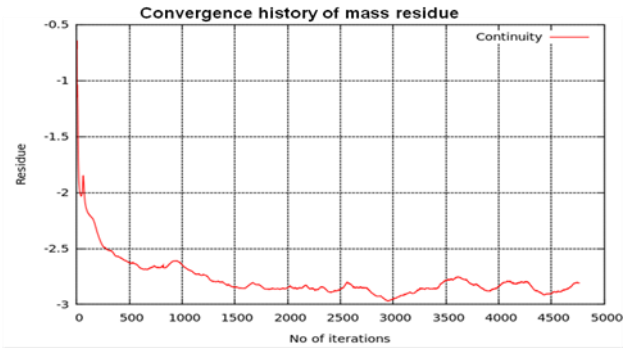

Fig. 8.1 Convergence history of mass residue.

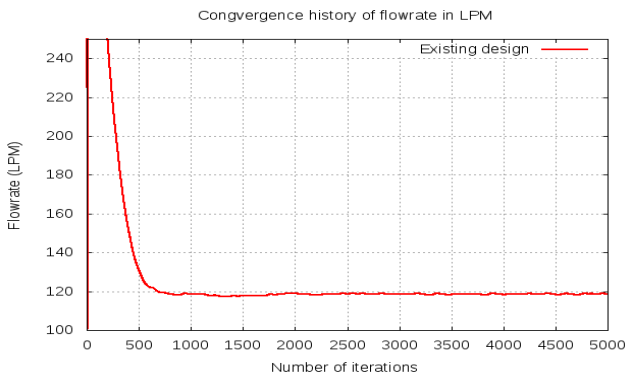

Fig. 9 Convergence history of flow rate in LPM at inlet plane

E. *Results*

About 119 LPM flow rate and 7.04meter head is developed by pump at 7000RPM.

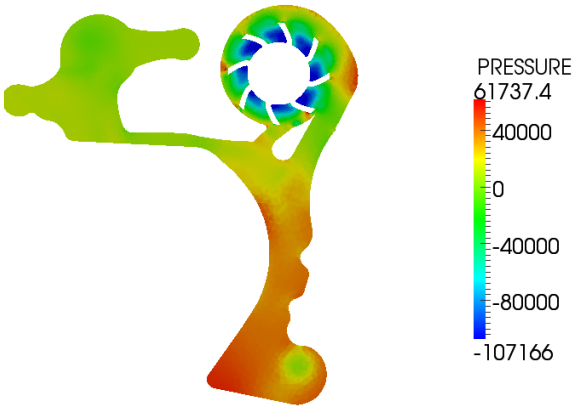

Fig. 10 Pressure contour plot at impeller mid plane.

VIII. EXPERIMENTAL RESULTS

Electromagnetic flow meter is used to measure pressure and flow-rate across pump. Average flow rate developed by pump at 7000 RPM is 58 LPM.

Fig. 11 Test rig setup to measure centrifugal pump performance.

IX. BENCHMARKING CASE

Considering resistance offered by radiator and piping, numerically equivalent resistance of 123Kpa is imposed, which is arrived iteratively, to match experimental flow rate. 63LPM flow rate and 13.2m head is developed by pump at 123Kpa back pressure at outlet of delivery.

Experimental Flow rate	Numerical Flow rate	% Difference
58 LPM	63 LPM	8.0%

Table. III Experimental vs Numerical Flow rate comparison.

Subsequent design modification of impeller to achieve required flow rate will be done with respect to benchmarking case, i.e. 63 LPM and 13.2m head.

X. IMPELLER REDESIGN STUDIES

Flow rate improvisation is to be achieved by modifying inlet and exit blade angles, number of blades, blade thickness and eye diameter.

A. Case #1: Radial Impeller

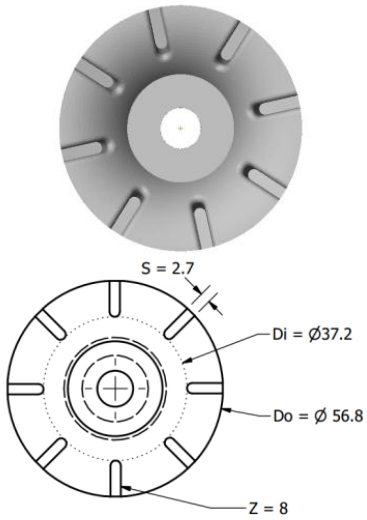

Fig. 12 Existing backward curved impeller is modified to radial type (hence $\beta_1 = \beta_2 = 90^0$)

By modifying backward to radial impeller, flow rate is reduced to 52 LPM from existing 63 LPM.

B. Case #2: Blade thickness Variation

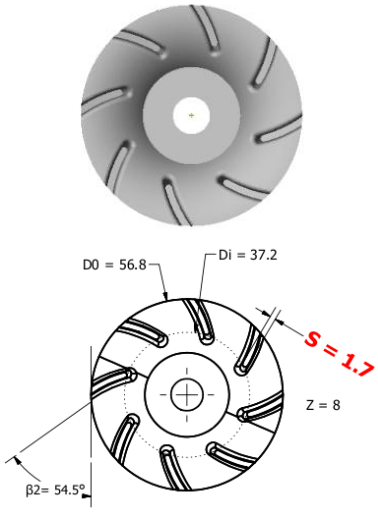

Fig. 13 Blade thickness is reduce by 1mm while retaining other original parameters

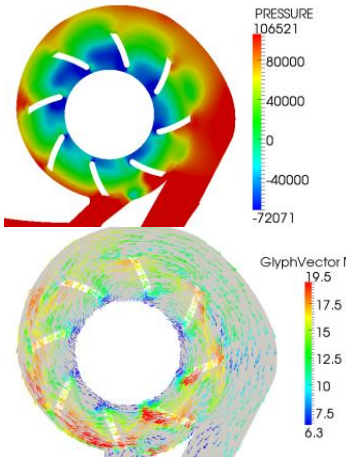

Fig. 14 Pressure variation contour plot (L) Velocity vectors (R)

Volume flow rate developed by pump with this impeller is 64.8 LPM and head generated is 12.6m. Only 3% increment is observed in flow rate.

C. Case #3:Blade number variation

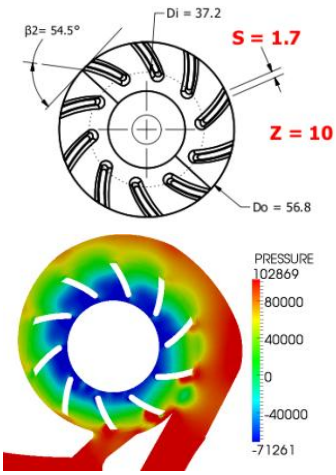

Fig. 15 Blade thickness is reduce by 1mm and blade number increased to 10 from 8,while retaining other original parameters

Flow rate is decreased by 14%. Adding an extra blade is serving no favourable purpose. Upon comparing Case 2 and 3, it can be concluded that flow rate improvement can be expected by maintaining 8 or 9 numbers of blades, but thickness of the blades should be maintained such that impeller's exit area remains constant.

D. Case #4: Inlet Diameter Variation

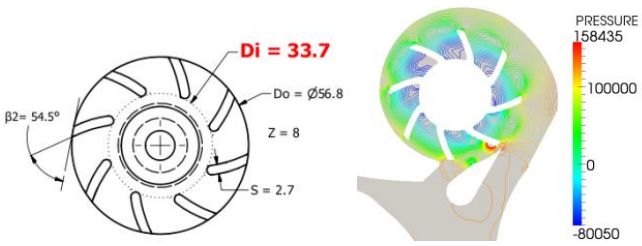

Fig. 16 Impeller inlet diameter is reduced by 3.5mm,i.e. for 37.2 to 33.7mm (L), Pressure contour lines at impeller mid plane (R)

Flow rate and head developed by pump is 71.01 LPM and 13.2m. Improvement observed in flow rate is 12.7% while no improvement is observed in head. Decreasing impeller inlet diameter yielded **12.7% improvement in flow rate**.

E. Case #5: Exit Blade angle Variation

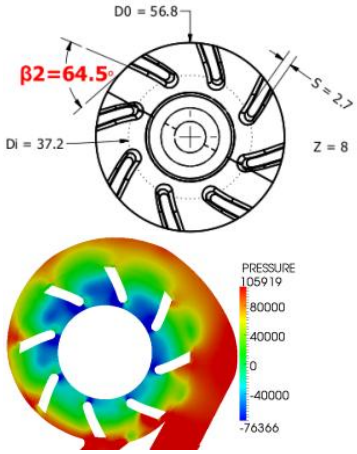

Fig. 17 Impeller exit blade angle is increased by 10deg (L), Pressure contour lines at impeller mid plane (R)

By increasing β2 by 10^0, flow rate and head developed by pump is 66.2 LPM and 12.65 m. About 5.0% improvement in flow rate is observed, but head is reduced by 4%.

F. Case #6: Exit Blade angle Variation

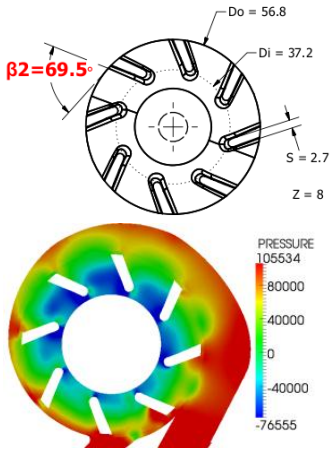

Fig. 18 Impeller exit blade angle is increased by 15deg (L), Pressure contour lines at impeller mid plane (R)

By increasing β2 by 15^0, flow rate developed by pump is 65.6 LPM. Only 4.7% improvement in flow rate is observed. Increasing β2 beyond 15^0 will yield no improvement.

G. Case #7: Exit Blade angle and Inlet diameter Variation

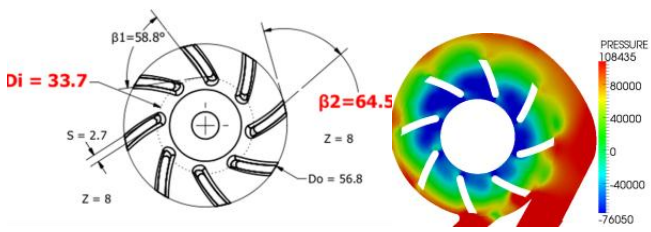

Fig. 19 Impeller exit blade angle is increased by 10deg & inlet diameter reduced by 3.5mm (L), Pressure contour lines at impeller mid plane (R)

By increasing β2 by 100,flow rate and head developed by pump is 73.7 LPM and 12.65 m. About 17% improvement in flow rate is observed, but head is reduced by 4%.

H. Case #8: Inlet Blade angle Variation

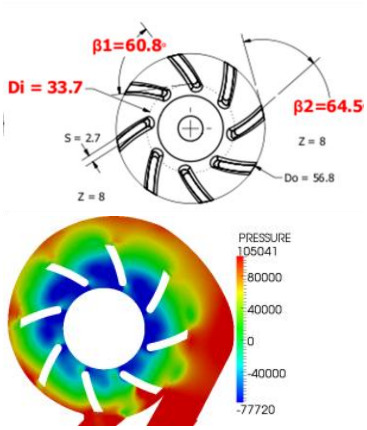

Fig. 20 Impeller inlet and exit blade angle are increased by 2 & 10deg respectively and inlet diameter also reduced (L), Pressure contour lines at impeller mid plane (R)

Increment of inlet blade angle has no substantial influence on flow rate. Flow rate 73.8 LPM is observed, which is same as case #7. Further increment on inlet angle is not carried out as it spoils the curvature of impeller blade, and it results in recirculation zones.

I. Case #9: Miscellaneous Optimized Design

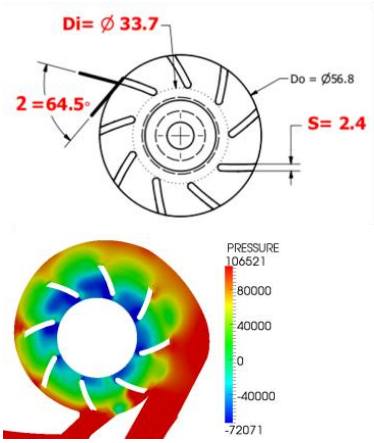

Fig. 21 Optimized impeller geometry (L), Pressure contour lines at impeller mid plane (R)

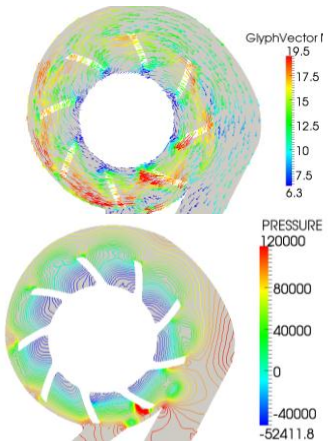

Fig. 22 Flow vectors (L), Pressure isoclines (R)

Considering the above design modifications and their corresponding performances, for higher flow rate to be achieved modifications to done on exit angle, impeller inlet diameter and no. of blades. Following modifications are made to the existing impeller.

1. Exit angle(β2) is increased by 10^0
2. Inlet impeller diameter is decreased by 3.5mm.
3. No. of blades are increased to 9 and thickness is reduced such that area occupied by impeller is same. Blade thickness is 2.4mm.

Volume flow rate and head developed by pump with this impeller is 76.8 LPM and 14m. Flow rate and head is increased by 22% and 6% respectively.

This improved design is fabricated and tested in test rig. About 12% improvement is seen in the volume flow rate, i.e. flow rate increased from 58 LPM to 65 LPM

XI. CONCLUSION

CFD analysis is done for existing centrifugal pump along with engine housing. After several design iterations maximum flow rate is achieved for case#9 impeller. Using RPT technique impeller is fabricated and tested the same in test rig. Experimentally, about 12% improvement is seen in the volume flow rate, i.e. flow rate increased from 58 LPM to 65 LPM while no changes in head is observed. As pump flow rate and head are mainly dependent on impeller outlet diameter and angular velocity, further improvement in flow rate can be achieved by increasing the impeller outer diameter.

ACKNOWLEDGEMENT

It gives immense pleasure to me to thank Prof. S. D. Mahajan and Dr. Sudhir for their valuable guidance in executing this project. I would like to express my gratitude and appreciation to Mr. Nagendra babu and Dr D. Radhakrishnan for allowing me to utilize test rig.

REFERENCES

[1] M.H. Shojaeefard, M. Tahani, M.B. Ehghaghi, M.A. Fallahian, M. Beglari, "Numerical study of the effects of some geometric characteristics of a centrifugal pump impeller that pumps a viscous fluid", Computers & Fluids 60 (2012) 61–70

[2] Wen-Guang Li in, "Effect of exit blade angle , viscosity and roughness in centrifugal pumps investigated by CFD computation,Lanzhou University of Technology China(Task quarterly 15 no 1, 21–41)

[3] E.C. Bacharoudis, A.E. Filios, M.D. Mentzos and D.P. Margaris, Parametric study of a centrifugal pump impeller by varying the outlet blade angle, 2008, The Open Mechanical Engineering Journal, 2008, 2, 75-83

[4] Khin Cho Thin, Mya Khaing, and Khin Maung Aye, Design and Performance analysis of centrifugal pump, World Academy of Science, Eng and Tech Vol : 2

[5] Erik Dick, Jan Vierendeels, Sven Serbruyns and John Voorde , "Performance prediction of centrifugal pumps with CFD tools", 2001, Department of Flow, Heat and Combustion Mechanics, Ghent University, Sint-

Pietersnieuwstraat 41, 9000 Gent, Belgium (TASK QUARTERLY 5 No 4 (2001), 579–594)

[6] Shujia, Z., Baolin, Z., Qingbo, H. and Xianhua, L., "Virtual Performance Experiment of a Centrifugal Pump", Proceedings of the 16th International Conference on Artificial Reality and Telexistence--Workshops (ICAT'O6), 2006.

[7] K. W. Cheah, T. S. Lee, S. H. Winoto,"Unsteady Fluid Flow Study in a Centrifugal Pump CFD Method", 7th ASEAN ANSYS Conference Biopolis, Singapore 30th and 31st October 2008

